Product information for the Mercedes-Benz
sales organisation 09/2015

ADVANTAGES
Mercedes-AMG S 63 4MATIC Cabriolet

Positioning: page 2 | Design: page 6 | Technology: page 10 | AMG Performance Studio: page 12 |
Colours and materials: page 15 | Data and dimensions: page 20 | Competitors: page 22

AMG

Mercedes-Benz

Positioning – driving dynamics combined with breathtaking design

The new Cabriolet from Mercedes-AMG supplements the S-Class family with the addition of a vehicle featuring **outstanding design and driving dynamics**: the performance-oriented **4MATIC all-wheel drive** in conjunction with the **AMG sports suspension based on AIRMATIC** enables pure driving pleasure – with the **AMG 5.5-litre V8 biturbo engine** producing 430 kW (585 hp) and 900 Nm of torque providing the necessary power. On the exterior the Mercedes-AMG S 63 4MATIC Cabriolet shows its extrovert nature: in conjunction with the **expressive AMG design language**, the already sensational look of the open-top luxury vehicle demonstrates an even greater level of elegance and sportiness.

Highlights of the Mercedes-AMG S 63 4MATIC Cabriolet:

- Effective agility thanks to **AMG 4MATIC all-wheel drive**, the **AMG sports suspension**, the selectable **AMG sports exhaust system** as well as the **AMG high-performance composite braking system**
- **AMG-specific radiator grille** with twin louvres and “AMG” lettering
- Sporty Interior design with **AMG sports seats with optimised lateral support**, **AMG instrument display** with 330 km/h scale, **AMG sports steering wheel** and AMG-specific manual transmission mode

>56-441667

Mercedes-AMG S 63 4MATIC, designo diamond white bright (799), 50.8 cm (20-inch) AMG 10-spoke forged wheels (647), AMG designo Exclusive nappa leather bengal red/black (567)

Mercedes-AMG S 63 4MATIC, AMG designo Exclusive nappa leather bengal red/black (567), AMG emblem embossed in the front centre armrest

Mercedes-AMG S 63 4MATIC, AMG designo Exclusive nappa leather bengal red/black (567), black designo piano lacquer (H21), Touchpad (448), AIRSCARF (403)

S BR 5217

Exterior – stylishly dynamic

Distinctive design elements characterise the Mercedes-AMG S 63 4MATIC Cabriolet and express the AMG design idiom to impressive effect: the **AMG bodystyling underscores the striking proportions** and details, such as inserts in silver chrome, highlight the **exclusivity of the vehicle**. AMG forged wheels create further sporty and visual highlights.
>56-441668

Mercedes-AMG S 63 4MATIC, iridium silver (775), LED Light package (P35)

Front end design

- **AMG-specific radiator grille** with twin louvres and "AMG" lettering
- **AMG front apron** in a A-wing design in the vehicle colour, trim and front splitter in silver chrome as well as large air intakes with flics in high-gloss black for additional guidance of cooling air flows
- **Cooling air intake grilles in high-gloss black**

Fabric top in black (740), Mercedes-AMG S 63 4MATIC, iridium silver (775), 48.3 cm (19-inch) AMG 10-spoke forged wheels (788)

Side design

- **AMG-specific side sill panels** with silver-chrome inserts
- **48.3 cm (19-inch) AMG 10-spoke forged wheels** (788), painted in titanium grey and polished, with 255/45 R 19 on 8.5 J x 19 ET39 (front) and 285/40 R 19 on 9.5 J x 19 ET39 (rear)
- "V8 BITURBO" lettering on the front wings

Mercedes-AMG S 63 4MATIC, iridium silver (775), Fabric soft top, black (740)

Rear end design

- AMG-specific rear apron with **trim in silver-chrome**
- **AMG sports exhaust system** with two chrome-plated twin tailpipe trim elements in a V8 design, and **sound selectable** via transmission mode control

Mercedes-AMG S 63 4MATIC, iridium silver (775), 48.3 cm (19-inch) AMG 10-spoke forged wheels (788), AMG nappa leather black (851)

Mercedes-AMG S 63 4MATIC, iridium silver (775), 48.3 cm (19-inch) AMG 10-spoke forged wheels (788), black designo piano lacquer (H21)

Interior – exclusive sportiness

The interior of the Mercedes-AMG S 63 4MATIC Cabriolet **combines a stylish design and exclusive appointments with fine materials and lavish details**. The cockpit of the Cabriolet is sporty with the AMG instrument display and AMG sports steering wheel. The high-quality, sporty perceived quality of the interior can be enhanced even further with the **Exclusive package**.

Features of the interior design:

- **AMG sports seats** with AMG-specific V8 seat upholstery layout and “AMG” badges
- **AMG instrument display with 330 km/h scale**
- **AMG sports steering wheel** in nappa leather
- **AMG sports pedal cluster**
- **AMG door sill panels** with “AMG” lettering and AMG velour floor mats with embroidered “AMG” lettering

>56-441669

AMG sports steering wheel

AMG sports steering wheel

For outstanding vehicle control, the grip area of the AMG sports steering wheel in nappa leather features more pronounced contours and is covered with perforated leather. AMG-specific shift paddles in bead-blasted die-cast zinc and a chrome-plated “AMG” badge underscore the sporty character.

>55-36130

AMG instrument display

AMG instrument display

A new dimension in driver information is provided by the large 31.2 cm AMG cockpit display, which displays all information in high resolution and in colour. Features include an AMG Warm Up menu and an AMG Set Up menu.

>55-40015

Head-up display (463)

Head-up display

Key driver information at a glance, without the driver having to take their eyes off the road – this is a feature made possible by the Head-up display. It projects a virtual image measuring approx. 21 x 7 cm into the driver’s field of vision, which appears to float around 2 metres in front of him/her, above the bonnet.

>55-39541

Mercedes-AMG S 63 4MATIC, AMG nappa leather crystal grey/black (858), AMG carbon-fibre/black piano lacquer trim (H10), Touchpad (448), AIRSCARF (403)

Mercedes-AMG S 63 4MATIC, AMG nappa leather crystal grey/black (858)

Technology – powerful performance

The Mercedes-AMG S 63 4MATIC Cabriolet boasts technical highlights that enhance the performance and driving dynamics even further compared with the standard model variant: the **AMG SPEEDSHIFT MCT 7-speed sports transmission** with extremely short shift times supports a style of driving that is both extremely sporty as well as fuel-efficient. Developed by Mercedes-AMG, the performance-oriented **4MATIC all-wheel drive ensures optimum power distribution**. The drive system is complemented by the **AMG sports suspension based on AIRMATIC**.

Overview of the technical equipment of the Mercedes-AMG S 63 4MATIC Cabriolet:

- **AMG 5.5-litre biturbo engine** producing 430 kW (585 hp) and 900 Nm of torque
- **AMG-specific 4MATIC all-wheel drive** with a power distribution of 33 : 67
- **AMG sports suspension based on AIRMATIC**

>56-441670

AMG 5.5-litre V8 biturbo engine (M 157 engine series)

AMG 5.5-litre biturbo engine

- Rated output: 430 kW (585 hp) at 5500 rpm
- Torque: 900 Nm at 2250–3750 rpm
- Acceleration 0–100 km/h: 3.9 s
- Combined fuel consumption: 10.4 l/100 km
- CO_2 emissions combined: 244 g/km

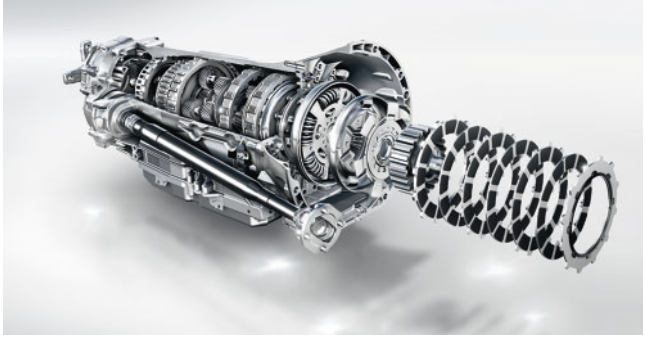

AMG SPEEDSHIFT MCT 7-speed sports transmission (427)

AMG SPEEDSHIFT MCT 7-speed sports transmission

- 3 transmission modes with different accelerator pedal and shift characteristic curves:
  - “C” (Controlled Efficiency): Particularly efficient and comfortable
  - “S” (Sport): Sporty gearshift characteristics with shorter shift times
  - “M” (Manual): Extremely fast manual shift times using the steering wheel shift paddles
- Automatic double-declutching function

AMG sports exhaust system, two-mode

AMG sports exhaust system, two-mode

- Two chrome-plated twin tailpipes in V8 design
- Sound characteristics according to selected transmission mode, load and engine speed – from discreet to emphatically sporty
- Adjustment via two variable exhaust flaps – without any effect on performance
- Better noise comfort in transmission mode C (Controlled Efficiency)

AMG sports suspension based on AIRMATIC

AMG sports suspension based on AIRMATIC

- Combines outstanding agility and vehicle control with unimpaired long-distance comfort
- Two suspension setups: “Sport” and “Comfort”
- AMG-specific kinematics, elastokinematics and programming of the variable damper control
- A lower volume of air in the air suspension system and a progressive piston geometry reduce body roll and pitching at an early stage

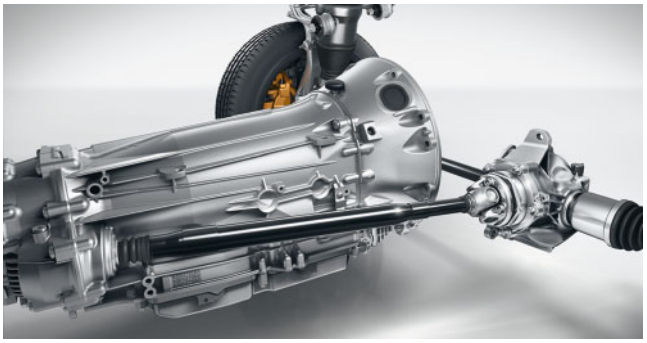

AMG-specific 4MATIC all-wheel drive

AMG-specific 4MATIC all-wheel drive

- Combines the best possible traction and typical AMG vehicle dynamics with maximum driving pleasure
- Dynamic rear-biased power distribution of 33 % to the front axle and 67 % to the rear axle
- High handling safety and grip, particularly in critical road conditions

AMG sports steering wheel

AMG speed-sensitive sports steering

- Constant, direct steering ratio of 13.5 : 1 for a sporty driving style
- Adaptation of the steering characteristics according to suspension setting for sporty or comfortable steering feedback

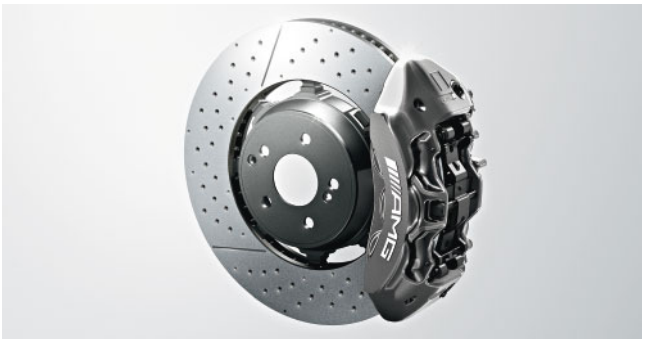

AMG high-performance composite braking system

AMG high-performance composite braking system

- Exceptional deceleration values thanks to internally ventilated and perforated brake discs in composite design at front and rear
- Front axle: 390 x 36 mm compound brake discs, internally ventilated and perforated with 6-piston fixed callipers
- Rear axle: 360 x 26 mm compound brake discs, internally ventilated and perforated with 1-piston floating callipers

AMG Exterior Carbon package

Mercedes-AMG S 63 4MATIC, designo cashmere white magno (049), 50.8 cm (20-inch) AMG 10-spoke forged wheels (648), AMG Exterior Carbon package (773)

Carbon-fibre inserts in side sill panels

High-quality applications in genuine carbon fibre create striking, sporty highlights when viewed from any angle – from the exterior mirror housings and inserts in the side sill panels to the rear apron insert.

Features of the AMG Exterior Carbon-Fibre package:

- A-wing on front apron in carbon fibre
- Carbon-fibre inserts in side sill panels
- Upper trim of rear apron in carbon fibre
- Exterior mirror housings in carbon fibre

>55-36017

Upper trim of rear apron in carbon fibre, AMG sports exhaust system, two-mode, AMG Exterior Carbon package (773)

AMG Night package

Mercedes-AMG S 63 4MATIC, designo cashmere white magno (049), 50.8 cm (20-inch) AMG 10-spoke forged wheels (648), AMG Night package (P60)

AMG side sill panel inserts in high-gloss black

AMG sports exhaust system with two black chrome-plated twin tailpipe trim elements, AMG Night package (P60)

Features in high-gloss black emphasise the sportiness – from the front splitter, the A-wing on the AMG front apron, the exterior mirror housings and the inserts in the AMG side sill panels to the trim strip in the rear apron and the two black chrome finished twin tailpipe trim elements.

Elements of the AMG Night package:

- A-wing of AMG front apron, A-wing trim strip and front splitter in high-gloss black
- AMG side sill panel inserts in high-gloss black
- Exterior mirror housings in high-gloss black
- Trim strip in AMG rear apron in high-gloss black
- AMG sports exhaust system with two black chrome finished twin tailpipe trim elements

>55-37129

AMG Performance Studio, optional extras

50.8 cm (20-inch) AMG 10-spoke forged wheels (647) painted in titanium grey and polished, including fully integrated wheel bolt covers

50.8 cm (20-inch) AMG 10-spoke forged wheels (648) painted in matt black with a high-sheen rim flange, including fully integrated wheel bolt covers

50.8 cm (20-inch) AMG 5-twin-spoke forged wheels (753) painted in titanium grey and with a high-sheen finish, including wheel bolt covers in black

AMG carbon-fibre engine cover (B14)

AMG ceramic high-performance composite braking system (B07)

Brake callipers painted red (U70)

AMG Performance steering wheel in black nappa leather/DINAMICA microfibre (281)

AMG Driver's package (250)

AMG carbon-fibre/black piano lacquer trim (H10)

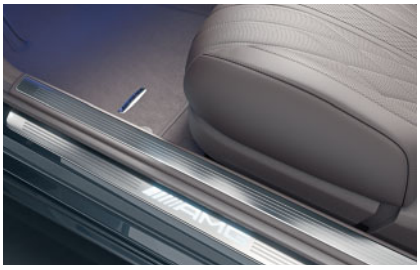

White-illuminated AMG door sill panels with "AMG" lettering (U25), AMG Exclusive floor mats (U24) with "AMG" badge and edging in nappa leather

Paint finishes

Non-metallic paint finishes
black (040)

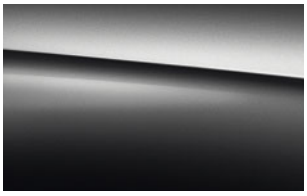

Metallic paint finishes
magnetite black (183)

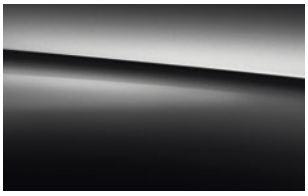

Metallic paint finishes
obsidian black (197)

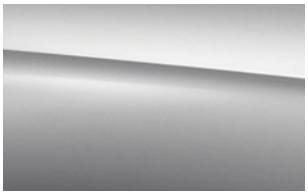

Metallic paint finishes
iridium silver (775)

Metallic paint finishes
cavansite blue (890)

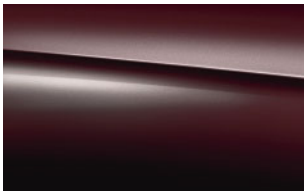

Metallic paint finishes
ruby black (897)

Metallic paint finishes
diamond silver (988)

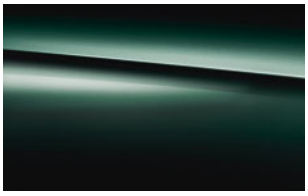

Metallic paint finishes
emerald green (989)

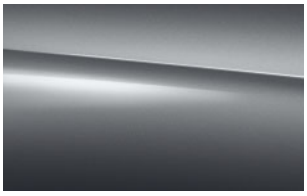

Metallic paint finishes
selenite grey (992)

Metallic paint finishes
anthracite blue (998)

designo paintwork
designo diamond white bright (799)

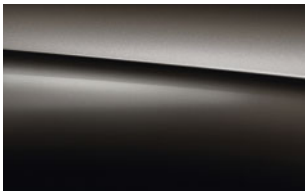

designo manufaktur paints
designo mocha black metallic (033)

designo manufaktur paints
designo allanite grey magno (044)

designo manufaktur paints
designo cashmere white magno (049)

Fabric top

Fabric top in black (740)

Fabric top in blue (744)

Fabric top in beige (745)

Fabric top in dark red (746)

Headlining

Headlining in black fabric (51U)

Headlining in porcelain fabric (55U)

Headlining in crystal grey fabric (58U)

designo headlining in black DINAMICA microfibre (61U)

designo headlining in porcelain DINAMICA microfibre (65U)

designo headlining in crystal grey DINAMICA microfibre (68U)

Trim elements

brown high-gloss burr walnut wood trim (731)

black high-gloss poplar wood trim (729)

designo metallised ash wood (H06)

black designo piano lacquer (H21)

designo piano lacquer, black flowing lines (H16)

AMG carbon-fibre/black piano lacquer trim (H10)

Upholstery

AMG nappa leather
black (851)

AMG nappa leather
porcelain/espresso brown (855)

AMG nappa leather
crystal grey/black (858)

AMG designo Exclusive nappa leather
black (561)

AMG designo Exclusive nappa leather
porcelain/espresso brown (565)

AMG designo Exclusive nappa leather
crystal grey/black (568)

AMG designo Exclusive nappa leather
bengal red/black (567)

AMG designo Exclusive nappa leather
saddle brown/black (584)

AMG designo Exclusive nappa leather
porcelain/deep-sea blue (585)

Technical data

	Mercedes-AMG S 63 4MATIC
Arrangement/no. of cylinders	V8
Number of valves per cylinder	4
Total displacement (ccm) (cc)	5461
Rated output (kW [hp] at rpm)	430 [585]/5500
Model variant number	217478
Restriction code	0-056 Plus modification year, 0-806 Model Year 2016
Market launch	2016–04
Engine series	M157
Engine variant	E55DEH LA REPO AMG
Rated torque (Nm at rpm)	900/2250–3750
Acceleration 0–100 km/h (s)	3.9
Top speed (km/h)	250
Emissions standard	Euro 6
C_d value	0.32
Transmission – gearshift type	Automatic
Turning circle (m)	11.90
Kerb weight/payload (kg)	2185/450
Perm. gross vehicle weight (kg)	2635
Enclosed boot capacity (l)	350
Enclosed luggage compartment capacity with roof down (for Cabriolet) (l)	250
Tank capacity/reserve (l)	80/12.0
Fuel consumption, urban	14.3 l/100 km
Fuel consumption, extra-urban	8.2 l/100 km
Fuel consumption, combined	10.4 l/100 km
CO_2 emissions combined (g/km)	244
Efficiency class ECE production vehicle (only valid for Germany)	E
Wheel designation, front	8.5 J x 19
Rear wheel rim designation	9.5 J x 19
Tyres/wheels, front	255/45 ZR 19 (104 Y) XL
Tyres/wheels, rear	285/40 ZR19 (107 Y) XL

The very latest – certificated – data may be found at http://productinfo.mercedes-benz.com

Dimensional drawings

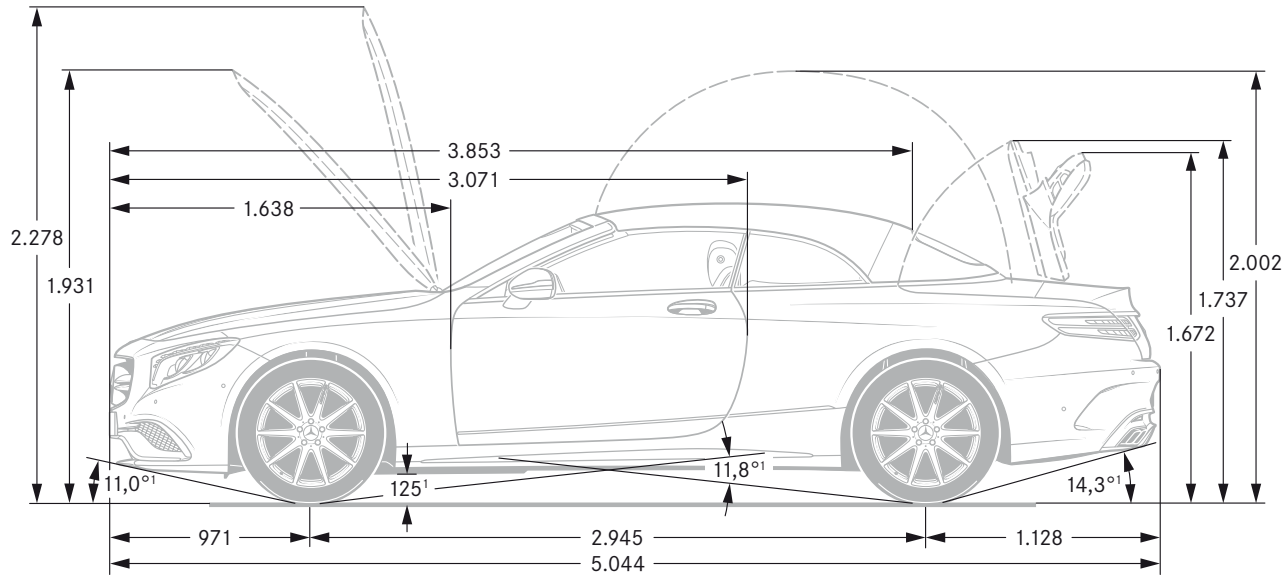

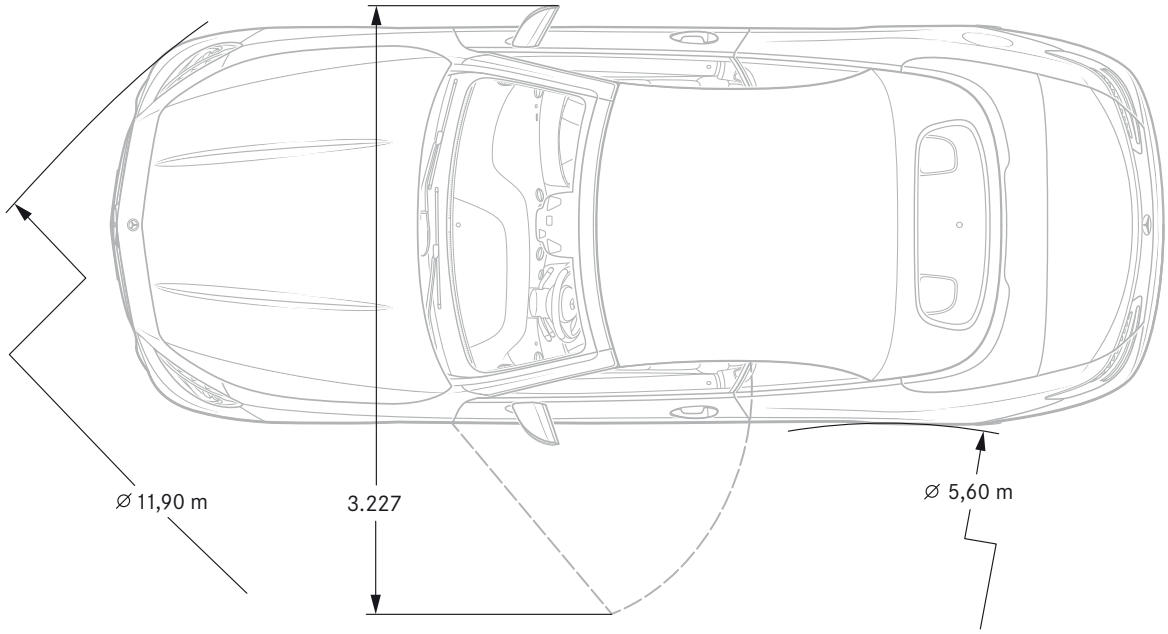

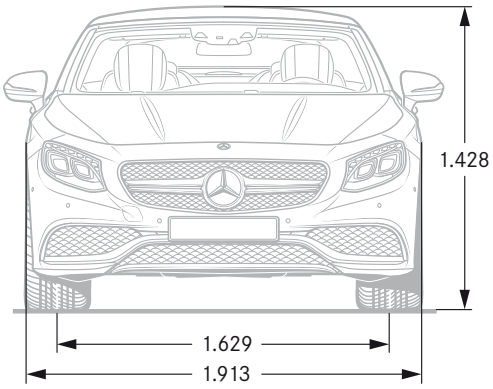

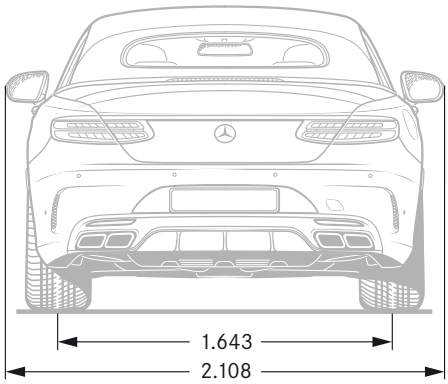

1) At perm. gross vehicle weight

Competitors

Bentley Continental GT V8 S Convertible

Weaknesses:

(–) Very high directional stability due to all-wheel drive, but high weight of 2470 kg (S-Class Cabriolet: 2115 kg). Tends to understeer significantly when cornering at speed
(–) At the critical limits the rigidity of the body tends to drop, significant vibration transfers to the steering wheel
(–) Equipment is on a traditional, outdated level, basic driving assistance systems such as a blind sport warning system or emergency braking assistant are lacking
(–) Many equipment features cost extra, including sports pedals and sports exhaust system
(–) Sluggish navigation system with outdated graphics, only 8-inch display (S-Class: 12-inch media display)

Strengths:

(+) Engine and transmission very well matched, effortless power delivery
(+) Very precise, light steering considering the weight
(+) Generous amount of space, even in the rear
(+) Perfect workmanship and very high quality materials, exclusive details such as two-tone leather seats and hand-finished stitching

Interesting equipment option:

With the Mulliner Driving Specification, the Continental GTC V8 S can be made even more exclusive, with features including diamond-shaped quilted seat covers and door panels, knurled shift lever, perforated pedals and also “jewel” decorated cover for tank filler cap and oil filler neck

Maserati GranCabrio MC

Weaknesses:

(–) Weaknesses in the dynamism: no all-wheel drive, no differential for power distribution, also only 6-speed transmission
(–) Highest consumption level and poorest efficiency values compared with the competition
(–) Only rudimentary equipment with assistance systems, no intelligent safety systems (such as COLLISION PREVENTION ASSIST PLUS or Stop&Go Pilot)
(–) Somewhat outdated Interior design, workmanship not as high a quality as the competitors
(–) Old-fashioned infotainment equipment with small 7-inch LCD screen (S-Class: 12-inch media display) and lack of internet connection

Strengths:

(+) V8 engine from Ferrari with very emotional, sometimes very loud engine sound
(+) Highly fade-resistant braking system from Brembo, although no ceramic brakes available
(+) Positive, very emotionally charged image thanks to Italian design
(+) Select materials in the interior such as leather from Poltrona Frau®, and in Alcantara® and carbon fibre

Interesting equipment option:

The seat bases of the front seats are also optionally available in carbon fibre

BMW M6 Cabriolet

Weaknesses:

(–) No all-wheel drive
(–) Unlike the standard model, no active speed control and stop&go function, also no cross-traffic assistant (S-Class with Driving Assistance package Plus)
(–) Facelift does not comprise the latest equipment options such as the Adaptive M suspension which is available in the M4
(–) Restricted space in the rear

Strengths:

(+) 4.4-litre engine with very direct response, high level of torque right from idle speed
(+) Even more powerful with the Competition package, top speed can be optionally raised to 305 km/h
(+) Comprehensive standard equipment, including head-up display with M-specific display and trim in carbon fibre
(+) Comprehensive infotainment offering with standard-fit ConnectedDrive navigation package, 10.2-inch colour screen, optionally also Online Entertainment with music flat rate

Interesting equipment option:

With the M Laptimer App, M6 drivers can analyse their personal driving style. At the same time the GoPro App can be used to document fast laps on the race track with a GoPro action camera

Sales arguments for the Mercedes-AMG S 63 4MATIC

The new S-Class Cabriolet from Mercedes-AMG has the potential to become the new jewel in the S-Class family: the elegant lines captivate whether the top is open or closed, the expressive appearance is made even more breathtaking with the exquisite AMG exterior and the sporty acceleration is ultimately guaranteed to give the driver goosebumps. Not one of the competitors combines elegance, comfort and dynamism so perfectly as the S 63 4MATIC. At the same time it is not only fast, but also one of the safest cabriolets in its class thanks to its intelligently networked assistance and communication systems.

Additional key sales arguments for the Mercedes-AMG S 63 4MATIC:

- With an output of 430 kW (585 hp) and 900 Nm of torque, the **AMG 5.5-litre V8 biturbo engine** guarantees unrivalled acceleration. The S 63 4MATIC accelerates from 0 to 100 km/h in 3.9 seconds. As an option, the top speed can reach 300 km/h with the AMG Driver's package (250).
- Dynamic acceleration manoeuvres with the shortest shift and reaction times come courtesy of the **AMG SPEEDSHIFT MCT 7-speed sports transmission** (427) with 3 specific transmission mode settings and a manual mode as well as double-declutching function.
- The switchable **AMG sports exhaust system** with two chrome-plated twin tailpipe trim elements delivers the appropriate emotional sound.
- The permanent all-wheel drive 4MATIC is designed to be sporty with a rear-wheel bias. In combination with the **AMG sports suspension based on AIRMATIC**, the S 63 4MATIC impresses, whatever the road conditions and speed, with hallmark AMG dynamism and precision.
- The AMG high-performance composite braking system guarantees a precise pressure point and the shortest stopping distances even under extreme conditions. Providing even more performance is the **AMG ceramic high-performance composite braking** (B07), characterised by the specially painted brake callipers with "AMG Carbon Ceramic" logo.
- The sporty appearance is further underscored by the **expressive exterior design** – from the AMG-specific front apron with front splitter in silver chrome and the rear apron in high-gloss black, through to the 48.3 cm (19-inch) AMG 10-spoke forged wheels.
- With the AMG Exterior Carbon-Fibre package (773) and the AMG Night package (P60), the appearance can be individualised even further. Highlights such as the AMG carbon-fibre engine cover (B14) or the LED Intelligent Light System (P35) with Swarovski crystals (5U5) create additional **exclusive touches**.
- To ensure that driving the Mercedes-AMG S 63 4MATIC **with the top down is also enjoyable**, there is a choice of innovative equipment options for maximum comfort which include the AIRCAP system (288), AIRSCARF (403) and the Warmth Comfort package (P68).
- Last but not least the S 63 4MATIC provides the **highest level of safety among the competition**, with DISTRONIC PLUS with Steering Assist and Stop&Go Pilot (233), BAS PLUS with Cross-Traffic Assist (268), COLLISION PREVENTION ASSIST PLUS (258) or PRE-SAFE PLUS (271).

Mercedes-AMG S 63 4MATIC	**Bentley Continental GT V8 S Convertible**	**Maserati GranCabrio MC**	**BMW M6 Cabriolet**
5.5-litre V8 petrol engine with twin turbocharging, AMG SPEEDSHIFT MCT 7-speed sports transmission	4.0-litre V8 petrol engine, twin turbocharging, 8-speed automatic transmission	4.7-litre V8 petrol engine, 6-speed automatic transmission	4.4-litre V8 petrol engine, 7-speed M dual-clutch transmission with Drivelogic
Rated output: **430 kW** (585 hp)	**388 kW** (528 hp)	**338 kW** (460 hp)	**412 kW** (560 hp)
Rated torque: 900 Nm	680 Nm	520 Nm	680 Nm
Fuel consumption: 10.4 litres (CO_2: 244 g/km)	11.1 litres (CO_2: 258 g/km)	14.5 litres (CO_2: 333 g/km)	10.3 litres (CO_2: 239 g/km)
0 to 100 km/h: 3.9 s	4.7 s	4.9 s	4.3 s
Top speed: 250 km/h (limited)	308 km/h	289 km/h	250 km/h (limited)
Energy efficiency class: E	D	G	F

Find out more: Enter the ADVANTAGESonline ID (e. g. >55-30528) from the brochure in the search field on ADVANTAGESonline to find out more about a topic!

http://productinfo.mercedes-benz.com

Important dates: 1st press photo/PAD: 02.09.2015 | Sales release: 18.12.2015 |
World première: 15.09.2015, IAA International Motor Show Frankfurt | ECE market launch: 04.2016

For internal use only. The information contained in ADVANTAGES refers to the ECE left-hand-drive versions of the Mercedes-Benz product range.
Specifications may vary from market to market and are not shown in individual cases.

Daimler AG Stuttgart · MS/SCI · Printed in Federal Republic of Germany, 09.15, item. no. 6784.4421.02
Changes may have been made to the design and specification of the product since this product information went to press (23.07.2015).